OILQUICK®
Automatic quick coupler systems

PARTS MANUAL

HYDRAULIC FRAME

OQ70 2.0

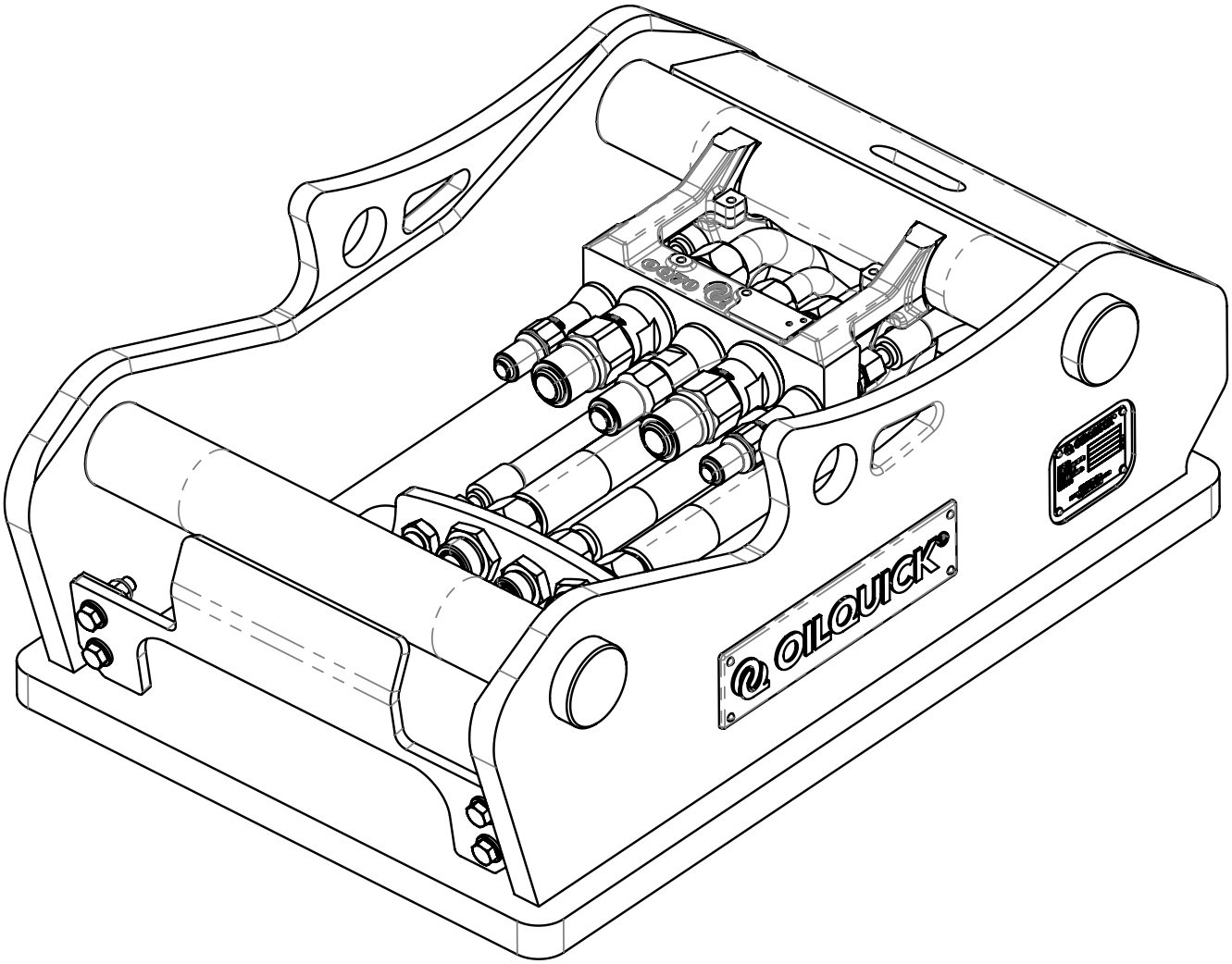

Manufacturer:

OilQuickAmericas
155 Main Street
Superior, WI 54880
Phone: 262.607.8425
Fax: 715.395.3703

E-mail: info@oilquickamericas.com
Web: www.oilquickamericas.com

When ordering spare parts:

- Include the part number, description and desired quantities.
- Include your complete address.
- Specify how the parts are to be delivered.

OILQUICK®
Automatic quick coupler systems

TABLE OF CONTENTS

OQ70 2.0

1.0 - HYDRAULIC FRAME ASSEMBLY
1.1 - OQ70 - D-FRAME ASSEMBLY 4

2.0 - HYDRAULIC COMPONENTS
2.1 - COUPLING 1/2", 3/4", & 1". 6
2.2 - SPLITBLOCK & BULKHEAD PLATE 8

3.0 - ELECTRICAL COUPLINGS
3.1 - V90-10 10

1.0 - HYDRAULIC FRAME ASSEMBLY

1.1 - OQ70 - D-FRAME ASSEMBLY

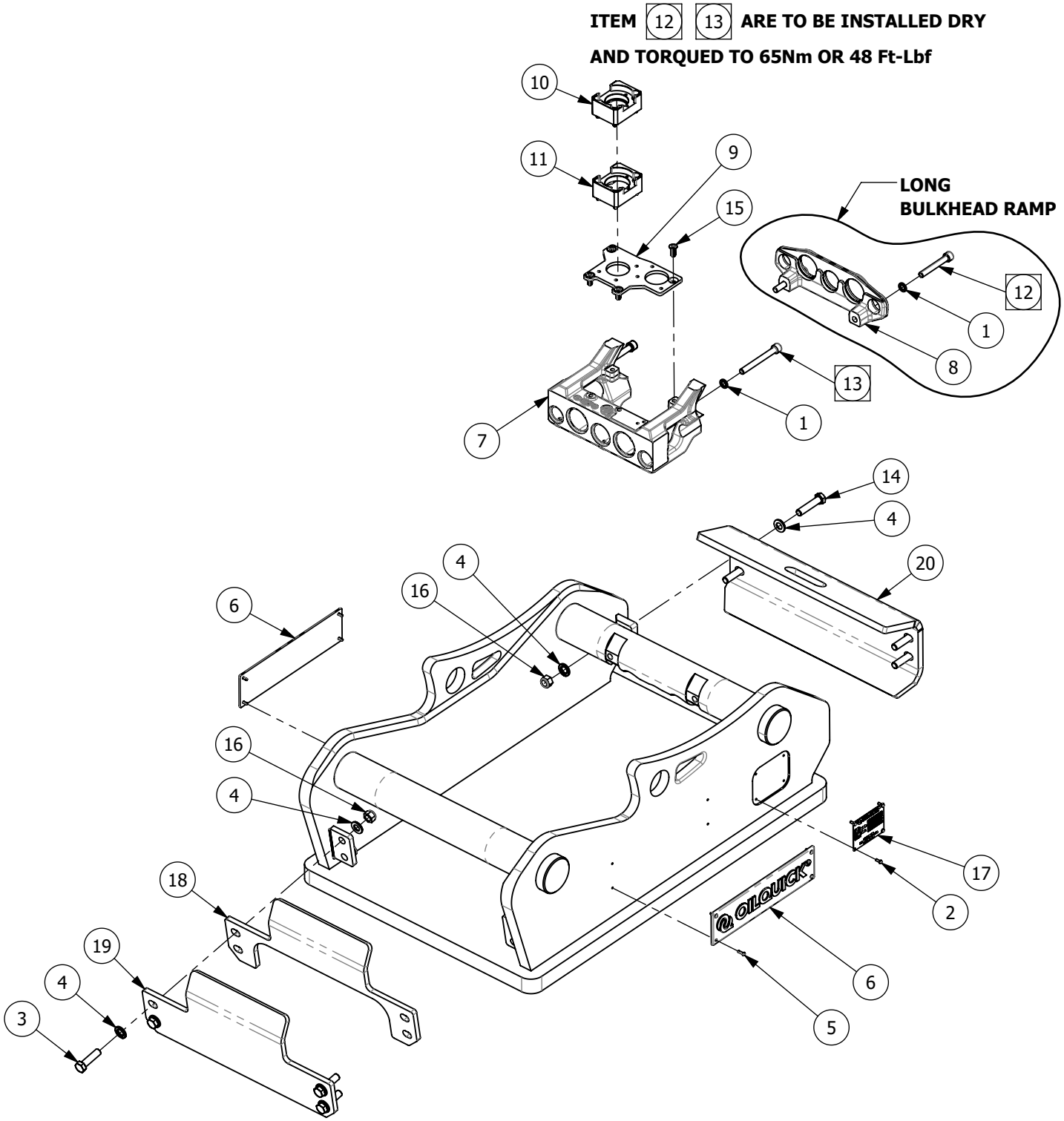

ITEM	PN#	NAME	QTY	UOM
1	50-00682	WASHER NORDLOCK M10 - 16.6 X 2.5 1244	4	EA
2	50-01065	DRIVE SCREW #6 X 3/8 STAINLESS RIVET	4	EA
3	50-01097	HH CS M12 - 1.75 X 45 Z_10.9 DIN 931	4	EA
4	50-01098	WASHER M12 - 24.0 X 2.5 Z_DIN 125	16	EA
5	50-01295	DRIVE SCREW #6 X 1/2 STAINLESS	8	EA
6	OQ4116271	EMBLEM - OILQUICK - OQ70-OQ120	2	EA
7	OQ4133919	COUPLING RAMP OQ70 BOLT ON	1	EA
8	OQ4133929	BACKING PLATE RAMP OQ70 BOLT ON LONG	1	EA
9	OQ4134525	MOUNTING PLATE V90 OQ70	1	EA
10	OQ5116267	V90-10 MOUNTING KIT OQ70-OQ80 2.0	1	EA
11	OQ5116268	V90-17 MOUNTING KIT OQ70-OQ80 2.0	1	EA
12	OQ7060146	SCREW MC6S M10x70 12,9	2	EA
13	OQ7060177	SCREW MC6S M10x90 12.9	2	EA
14	OQ7060217	HH CS M12 x 55 8.8 FZB	4	EA
15	OQ7060335	SCREW MFT 8X20 FZB ISO 14581	4	EA
16	OQ7065005	NUT - M12 NYLOCK	8	EA
17	OQE04743	SERIAL TAG - OILQUICK AMERICAS	1	EA
18	OQE06109	PROTECTION PLATE FRONT - OQ70 CUTOUT 2.0	1	EA
19	OQE06114	PROTECTION PLATE FRONT - OQ70 SOLID 2.0	1	EA
20	OQE06119	PROTECTION PLATE REAR - OQ70 SOLID 2.0	1	EA

2.0 - HYDRAULIC COMPONENTS

2.1 - COUPLING 1/2", 3/4", & 1"

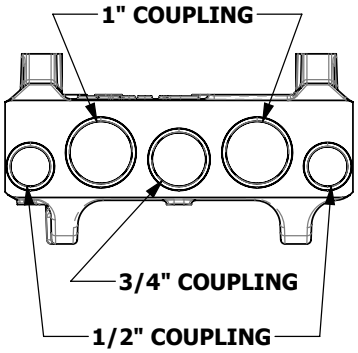

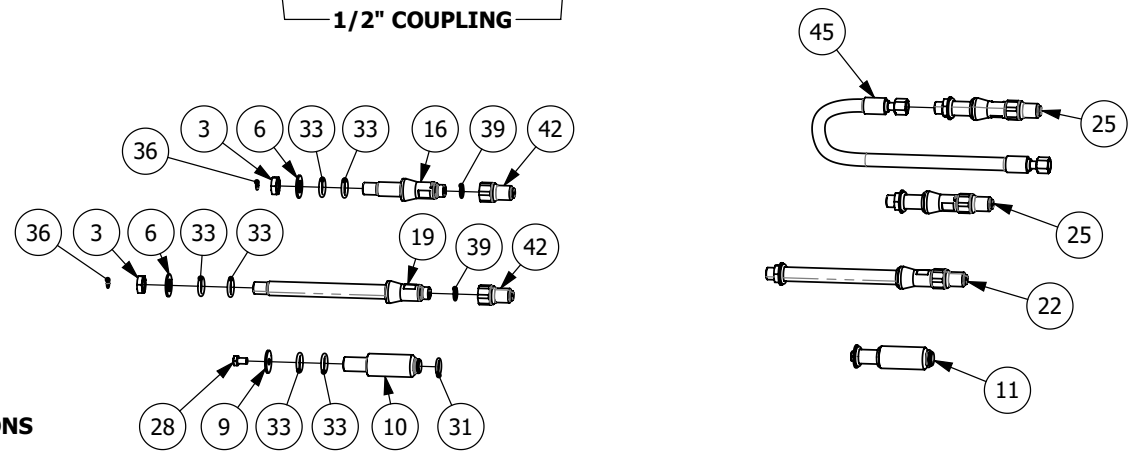

1/2" COUPLING OPTIONS

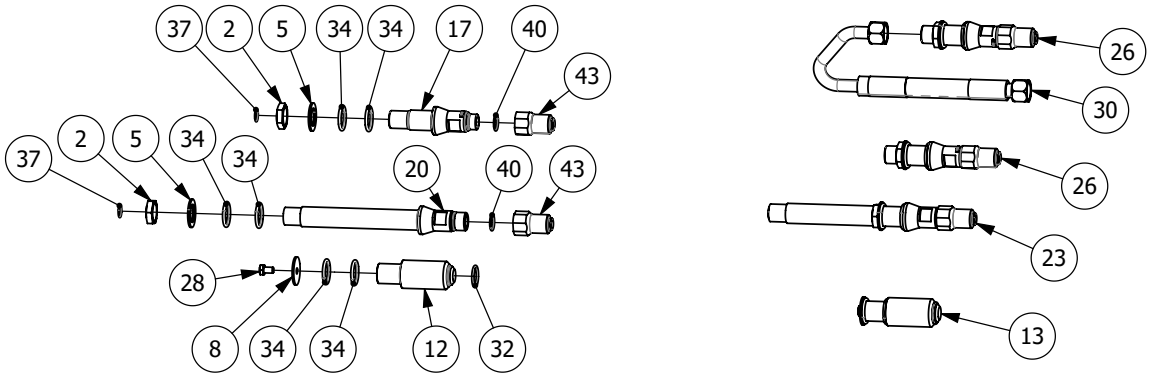

3/4" COUPLING OPTIONS

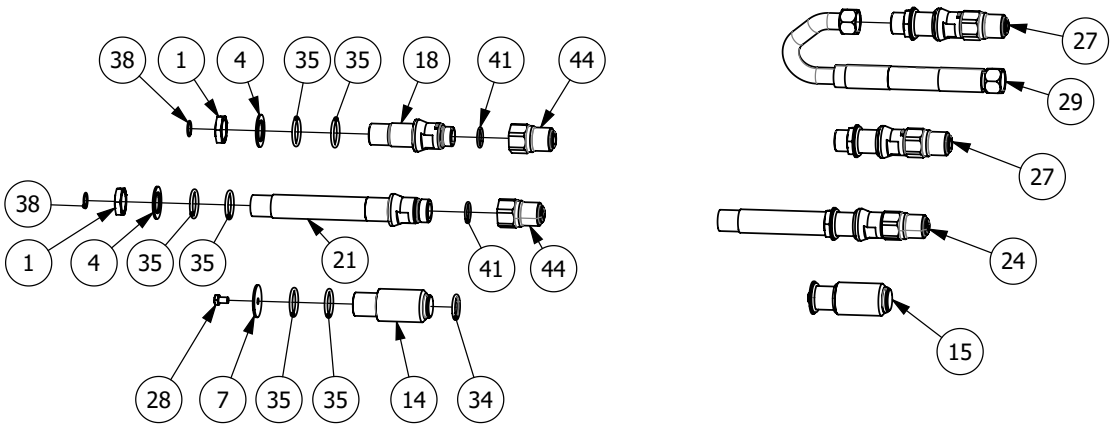

1" COUPLING OPTIONS

ITEM	PN#	NAME	QTY	UOM
1	40-00499	FTG-HYD 16MO LOCKNUT	2	EA
2	40-00500	FTG-HYD 12MO LOCKNUT	2	EA
3	40-00501	FTG-HYD 08MO LOCKNUT	2	EA
4	OQ4112314	WASHER 1.375 - 2.16 X 0.12 P	2	EA
5	OQ4112315	WASHER 1.188 - 1.88 X 0.12 P	2	EA
6	OQ4112316	WASHER 0.750 - 1.49 X 0.12 P	2	EA
7	OQ4112658	WASHER 1”	1	EA
8	OQ4112659	WASHER 3/4”	1	EA
9	OQ4112660	WASHER 1/2”	1	EA
10	OQ4112667	POLY ADAPTER 1/2”	1	EA
11	OQ4112668	POLY ADAPTER 1/2” OQ70-90	1	EA
12	OQ4112669	POLY ADAPTER 3/4”	1	EA
13	OQ4112670	POLY ADAPTER 3/4” OQ70-90	1	EA
14	OQ4112671	POLY ADAPTER 1”	1	EA
15	OQ4112672	POLY ADAPTER 1” OQ70-90	1	EA
16	OQ4113605	BULKHEAD 1/2” SHORT OQ70/55 OQ80	1	EA
17	OQ4113606	BULKHEAD 3/4” SHORT OQ70/55 OQ80	1	EA
18	OQ4113607	BULKHEAD 1” SHORT OQ70/55 OQ80	1	EA
19	OQ4113918	BULKHEAD 1/2” LONG OQ70/55	1	EA
20	OQ4113919	BULKHEAD 3/4” LONG	1	EA
21	OQ4113920	BULKHEAD 1” LONG	1	EA
22	OQ5111083	COUPLING KIT 1/2” LONG OQ70/55	1	EA
23	OQ5111084	COUPLING KIT 3/4” OQ70-90 LONG	1	EA
24	OQ5111085	COUPLING KIT 1” OQ70-90 LONG	1	EA
25	OQ5112080	COUPLING KIT 1/2” OQ70-90 NO BLOCK	2	EA
26	OQ5112081	COUPLING KIT 3/4” OQ70-90 NO BLOCK	2	EA
27	OQ5112082	COUPLING KIT 1” OQ70-90 NO BLOCK	2	EA
28	OQ7060118	HH CS M10 - 1.50 X 16	3	EA
29	OQ7150213	HYDRAULIC HOSE/PIPE 1” OQ70/55 OQ80	1	EA
30	OQ7150214	HYDRAULIC HOSE/PIPE 3/4”	1	EA
31	OQ7160031	RUBBER RING 22x4	1	EA
32	OQ7160032	RUBBER RING 30x4	1	EA
33	OQ7160042	O-RING 24x5 NBR70	6	EA

ITEM	PN#	NAME	QTY	UOM
34	OQ7160043	O-RING 34x5 NBR 70	7	EA
35	OQ7160044	O-RING 40x5 NBR 70	6	EA
36	OQ7160045	O-ring 12,42x1,78 NBR90	2	EA
37	OQ7160046	O-RING-018 -12MO (18,77x1,78) NBR 90D	2	EA
38	OQ7160047	O-ring 23,52x1,78 NBR90	2	EA
39	OQ7160048	O-ring 17,6x2,62 NBR70	2	EA
40	OQ7160049	O-RING 23,47x2,62 NBR70	2	EA
41	OQ7160050	O-ring 28,17x3,52 NBR70	2	EA
42	OQ7206017	HYDRAULIC COUPLING 1/2”, MALE	2	EA
43	OQ7206019	HYDRAULIC COUPLING 3/4”, MALE	2	EA
44	OQ7206021	HYDRAULIC COUPLING 1”, MALE	2	EA
45	OQE01411	HOSE - HYD 08M5K-08FOX-08FOX-20.5	1	EA

Notes

2.0 - HYDRAULIC COMPONENTS

2.2 - SPLITBLOCK & BULKHEAD PLATE

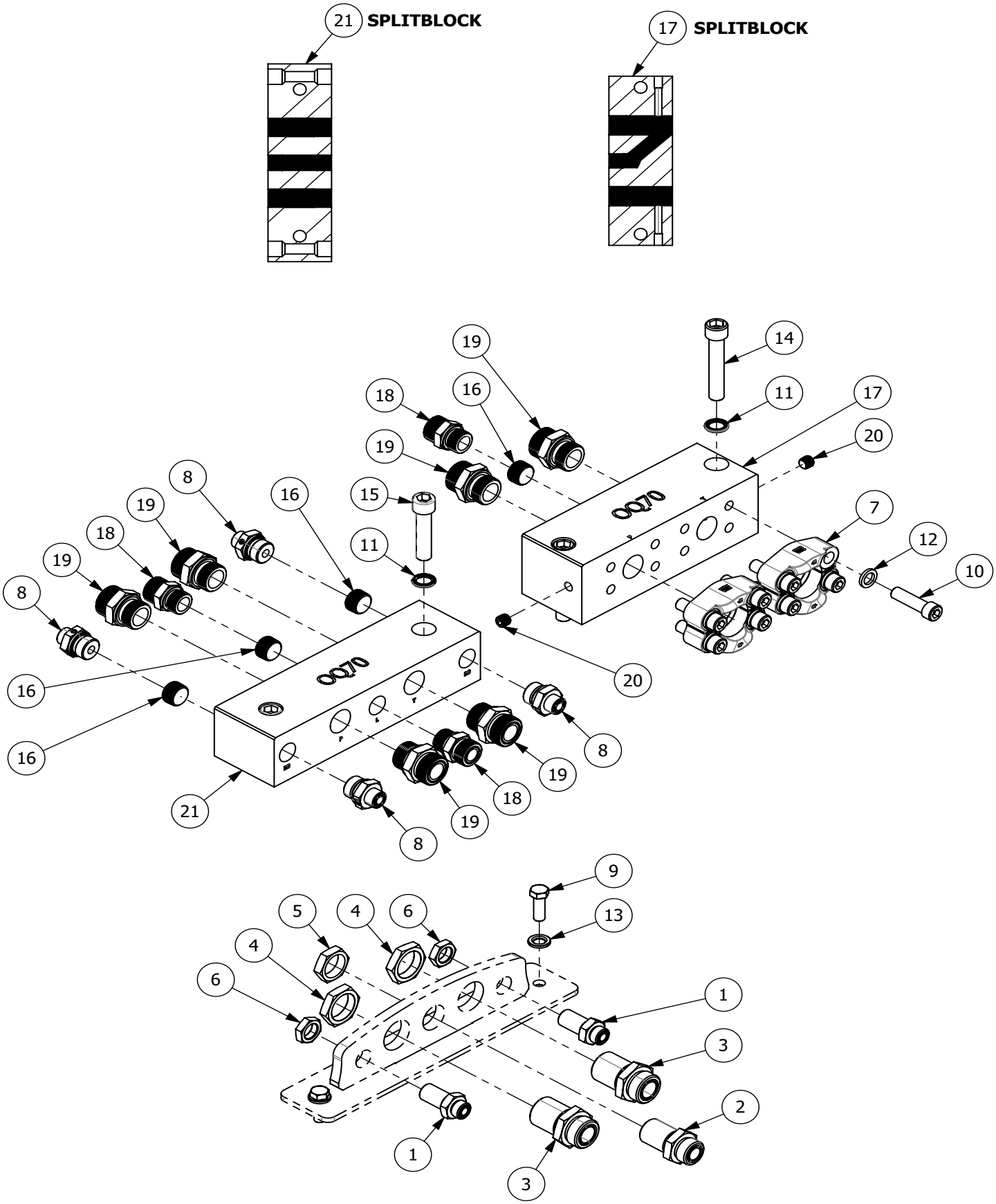

ITEM	PN#	NAME	QTY	UOM
1	40-00449	FTG-HYD 08MO-08MO BULKHEAD 8_wlo-s	2	EA
2	40-00450	FTG-HYD 12MO-12MO BULKHEAD	1	EA
3	40-00451	FTG-HYD 16MO-16MO BULKHEAD	2	EA
4	40-00499	FTG-HYD 16MO LOCKNUT	2	EA
5	40-00500	FTG-HYD 12MO LOCKNUT	1	EA
6	40-00501	FTG-HYD 08MO LOCKNUT	2	EA
7	40-01244	SPLIT FLANGE -20FL62-M14	4	EA
8	40-02640	FTG-HYD 12MBSPP-08MO SEAL-E	4	EA
9	50-00105	HH CS M12 X 1.75 X 35	2	EA
10	50-00167	SH CS M14 - 2.00 X 50	8	EA
11	50-00734	WASHER NORDLOCK M16 - 25.4 X 3.3 1536	4	EA
12	50-01091	WASHER NORDLOCK M14 - 23.1 X 3.3	8	EA
13	50-01098	WASHER M12 - 24.0 X 2.5 Z_DIN 125	2	EA
14	50-01395	SH CS M16 - 2.00 X 90 Z_ 12.9	2	EA
15	OQ7060301	SH CS M16 - 2.00 X 70	2	EA
16	OQ7091010	Plug G3/4” ED	4	EA
17	OQ7200270	SPLIT BLOCK 2x1” + 1x3/4”	1	EA
18	OQ7200281	NIPPLE ORFS12 UF-G3/4” UF ED	3	EA
19	OQ7200282	Nipple ORFS16 UF-G1” UF ED	6	EA
20	OQ7200283	Plug G1/4” ED	2	EA
21	OQ7200285	HYDR.BLOCK 2x1”, 1x3/4”, 2x1/2”	1	EA

3.0 - ELECTRICAL COUPLINGS

3.1 - V90-10

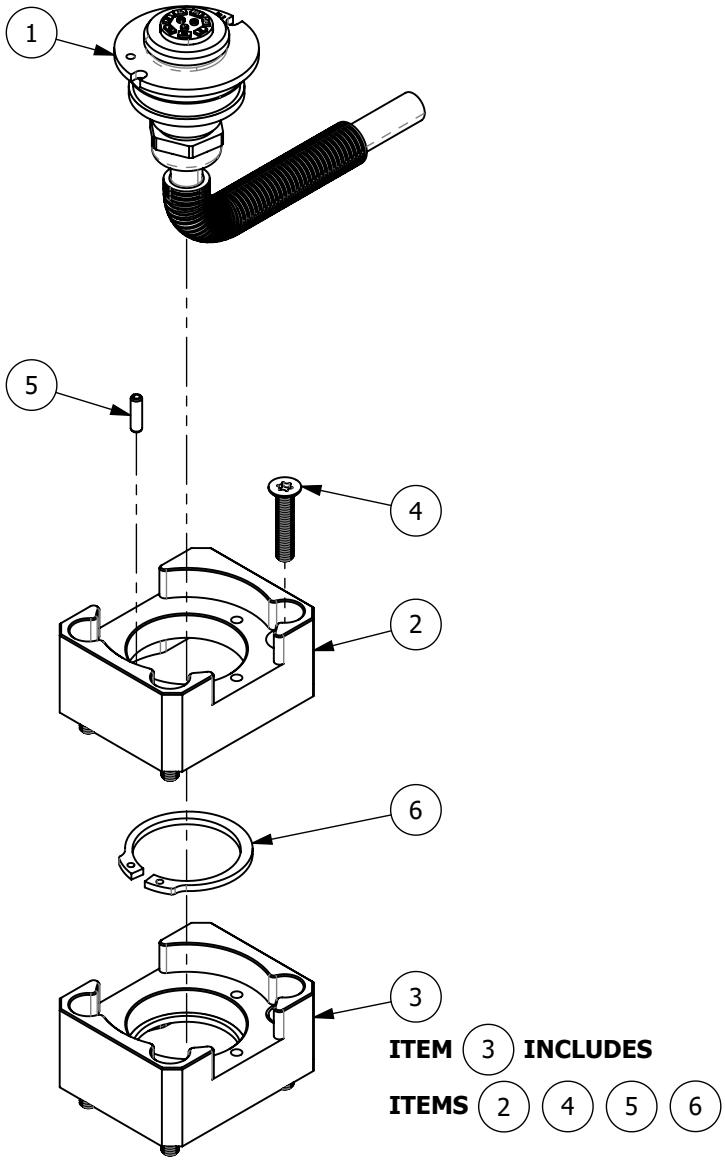

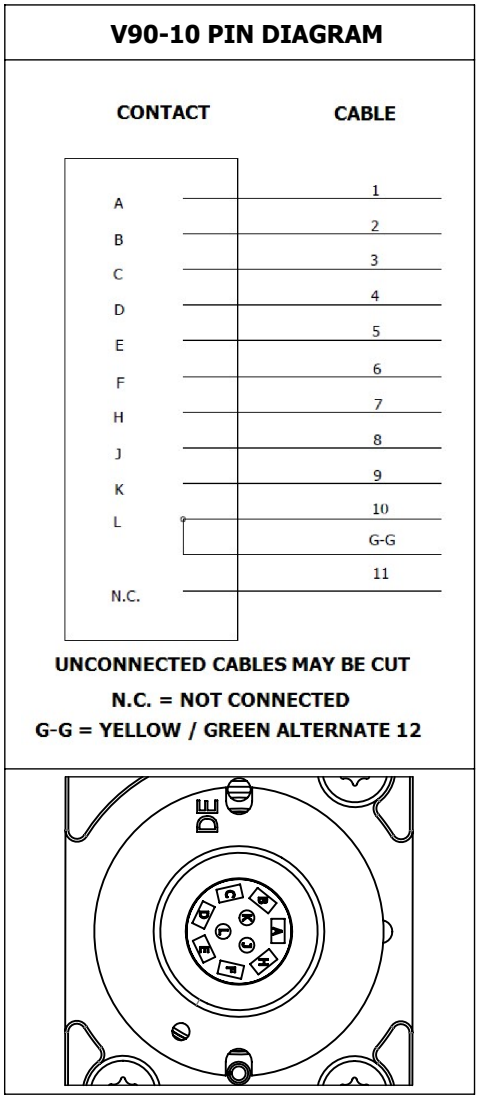

STANDARD V90 COUPLING WITH PIGTAIL HARNESS (LOOSE WIRES) SHOWN. ACTUAL V90 CONFIGURATION MAY VARY.

ITEM	PN#	NAME	QTY	UOM
1	OQ4125039	ELECTRICAL COUPLING V90-10 MALE Ø50	1	EA
2	OQ4134526	HOLDER V90-10 OQ70	1	EA
3	OQ5116267	V90-10 MOUNTING KIT OQ70-OQ80 2.0	1	EA
4	OQ7060334	SCREW MFT 6x30 A4 ISO 14581	3	EA
5	OQ7089013	Spring pin FRP 4x14 DIN 1481	1	EA
6	OQ7170054	Circlip AS 40 t=2,5	1	EA

Notes

Notes

Notes

Dealer:

OILQUICK®
Automatic quick coupler systems

OilQuickAmericas
155 Main Street
Superior, WI 54880
Phone: 262.607.8425
Fax: 715.395.3703

E-mail: info@oilquickamericas.com
Web: www.oilquickamericas.com

Part Number: OQE07591 - 10/09/2026