OILQUICK®
Automatic quick coupler systems

PARTS MANUAL
OQSS COUPLER
OQ70/55

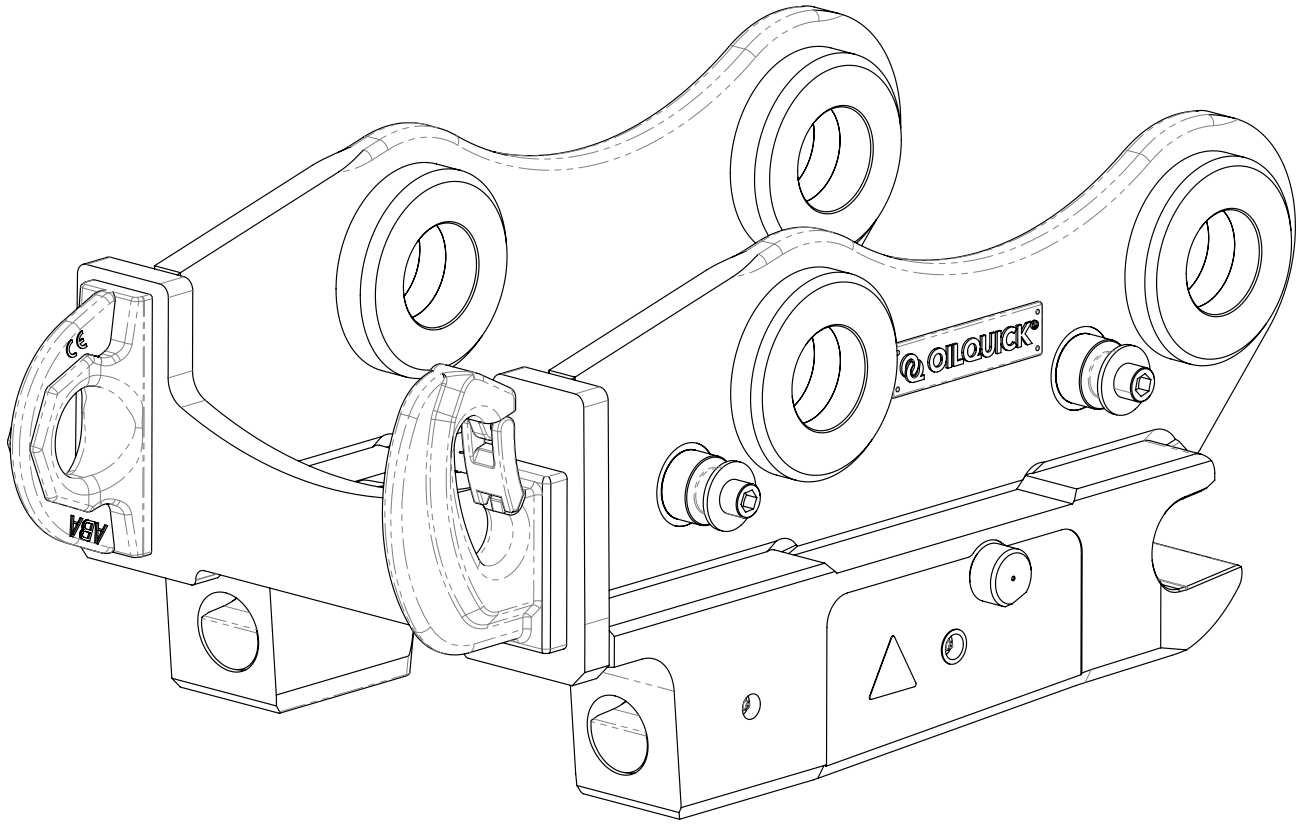

Manufacturer:

OilQuickAmericas
155 Main Street
Superior, WI 54880
Phone: 262.607.8425
Fax: 715.395.3703

E-mail: info@oilquickamericas.com
Web: www.oilquickamericas.com

When ordering spare parts:

- Include the part number, description and desired quantities.
- Include your complete address.
- Specify how the parts are to be delivered.

OILQUICK®
Automatic quick coupler systems

TABLE OF CONTENTS

OQ70/55

1.0 - QUICK COUPLER
1.1 - OQ70/55 - COUPLER 4

2.0 - INSTALL COMPONENTS
2.1 - HOSE CLAMPS 8
2.1.1 - OQ4119447 - HOSE CLAMP 1" 8
2.1.2 - OQ4119426 - HOSE CLAMP 1" + 1/2" 9
2.1.3 - OQ4129702 - HOSE CLAMP 1" + 3/4" 10
2.1.4 - OQ4119435 - HOSE CLAMP 1" + 3/4" + 1/2" 11
2.1.5 - OQ4124038 - HOSE CLAMP 1" + 2" X 1/2" 12
2.1.6 - OQ4119458 - HOSE CLAMP SPACER KIT 13
2.2 - OQ5110941 - GUIDE BLOCK MANIFOLD (DRAIN CROSSOVER) 14
2.3 - OQE06347 - ASSEMBLY GUIDE BLOCK OQ65+ 15

3.0 - SERVICE COMPONENTS
3.1 - OQ5116281 - FIRST AID KIT OQ70/55 16

1.0 - COUPLER

1.1 - OQ70/55 COUPLER

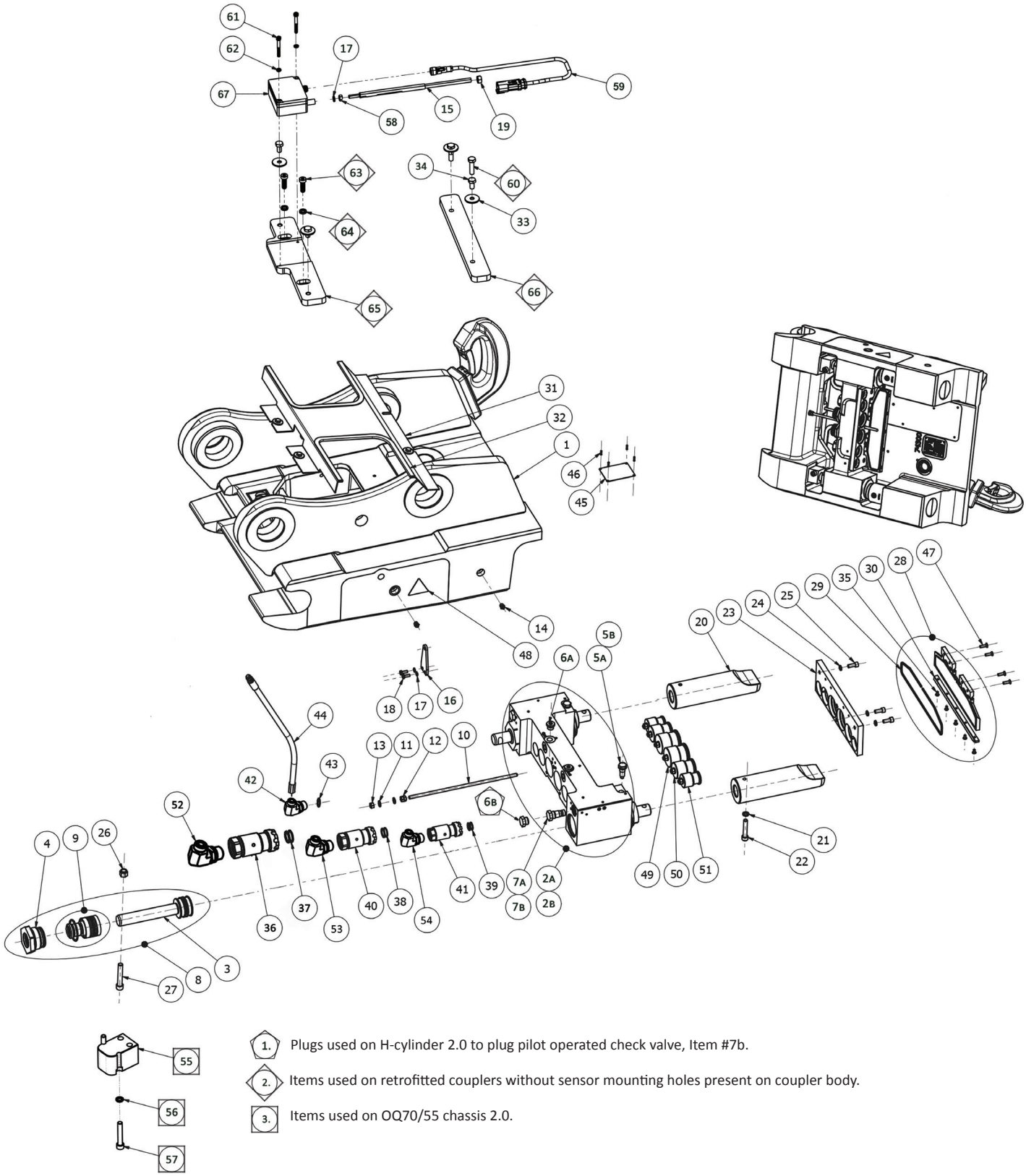

1. Plugs used on H-cylinder 2.0 to plug pilot operated check valve, Item #7b.
2. Items used on retrofitted couplers without sensor mounting holes present on coupler body.
3. Items used on OQ70/55 chassis 2.0.

ITEM	PART#	NAME	QTY	UOM
1	–	OQ70/55 QUICK COUPLER	1	EA
2A	OQ4115817	H-CYLINDER OQ70/55-80 1.0	1	EA
2B	OQ4130928	H-CYLINDER 2.0 OQ70/55-80	1	EA
3	OQ4115808	PISTON ROD OQ70/55-80	2	IN
4	OQ4115264	GUIDE NUT, PISTON ROD OQ70/55-80	2	EA
5A	OQ7008004	PRESSURE RELIEF VALVE	2	EA
5B	OQ7008001	PRESSURE RELIEF VALVE H-CYL 2.0	2	EA
6A	OQ7200224	PLUG VSTI M16x1,5 ED	2	EA
6B	OQ7200224	PLUG VSTI M16x1,5 ED (SEE NOTE 1)	2	EA
7A	OQ7009012	CHECK VALVE 4CK30-I-S3-A9	2	EA
7B	OQ7009001	PILOT OPERATED CHECK VALVE H-CYL 2.0	2	EA
8	OQ4115265	KIT-PISTON ROD H-CYL. OQ70/55-80 COMPL.	2	EA
9	OQ7020230	SEAL KIT H-CYL OQ70/55-80 DOC	1	EA
10	OQ4110907	OPENING BAR OQ70-70/55	1	EA
11	50-00493	WASHER M8 - 16.0 Z	2	EA
12	50-00482	NUT M6M M8 FZB	2	EA
13	50-00754	NUT M6M M8 NYLOCK	1	EA
14	OQ7205005	FTG-ZERK M10 X 1.5	4	EA
15	OQE05932	OQ70-55 E-VA ROD-198MM	1	EA
16	OQE06972	OQ70/55 SENSOR BRACKET	1	EA
17	50-00905	WASHER NORDLOCK M6 - 10.8 X 1.8 1519	3	EA
18	OQ7060082	SCREW M6S M6x14 8.8 FZB	2	EA
19	50-01346	FH CS M6 - 1.0 X 12 Z_8.8	1	EA
20	OQ4114075	LOCKING PLUNGER OQ70-70/55 Ø30	2	EA
21	50-00682	WASHER NORDLOCK M10	2	EA
22	OQ7060182	SCREW MC6LS M10x50 10.9	2	EA
23	OQ4115362	GUIDE PLATE OQ70/55-80	1	EA
24	50-00773	WASHER NORDLOCK M8	3	EA
25	OQ7060079	SCREW MC6S M8 - 1.25 x 20 12.9	3	EA
26	OQ7065005	NUT- M12 NYLOCK	2	EA

ITEM	PART#	NAME	QTY	UOM
27	OQ7060148	SCREW MC6S M12x70 12.9	2	EA
28	OQ4114582	DIRT GUARD OQ70/55-80	1	EA
29	OQ4115211	RUBBER SEAL, DIRT GUARD	1	EA
30	OQ4114420	GUIDE LIP, DIRT GUARD OQ70/55-80	1	EA
31	OQE06613	GUARD ASSY OQSS OQ80	1	EA
32	30-00871	EDGE TRIM PVC 1/16” (.040”-.095”) X 5/8”	4	EA
33	OQ7072035	WASHER FNDR M8 - 28.0 Z	4	EA
34	OQ7060004	SCREW M6S M8 - 1.25 x 16 8.8 FZB	4	EA
35	OQ7060136	SCREW MF6S M5x10 10.9	5	EA
36	OQ4118454	HYDRAULIC COUPLING 1” - M33, FEMALE	2	EA
37	OQ7072132	NOSE 1”	2	EA
38	OQ7020131	NOSE SEAL 3/4”	2	EA
39	OQ7020130	NOSE SEAL 1/2”	2	EA
40	OQ4118524	HYDRAULIC COUPLING 3/4”, M27 FEMALE	2	EA
41	OQ4118550	HYDRAULIC COUPLING 1/2”, M22 FEMALE	2	EA
42	OQ7200209	ELBOW ORFS06 UF-M16x1,5 UF 90° ADJ	2	EA
43	OQ7200155	SEAL WASHER M16	2	EA
44	OQE04546	HOSE-HYD 04M2TMTF-06FOX-06FOX-43.25CL	2	EA
45	OQE04743	SERIAL TAG - OILQUICK AMERICAS	1	EA
46	OQ7093007	RIVET POP 3.2 x12.3 ALUMINUM	4	EA
47	OQ7060091	SCREW MF6S M6x20 10.9	4	EA
48	OQ7410059	PINCH DECAL	2	EA
49	OQ4121131	POLY ADAPTER 1”, H-CYLINDER	2	EA
50	OQ4121134	POLY ADAPTER 3/4”, H-CYLINDER	2	EA
51	OQ4121137	POLY ADAPTER 1/2”, H-CYLINDER	2	EA
52	OQ7200229	ELBOW ORFS16 UF-M33x2 UF 90° ADJ	2	EA
53	OQ7200228	ELBOW ORFS12 UF-M27x2 UF 90° ADJ	2	EA
54	OQ7200227	ELBOW ORFS08 UF-M22x1,5 UF 90° ADJ	2	EA
55	OQ4132213	CHASSIS 2.0 H-CYL MOUNT OQ70 70/55 OQ80 (SEE NOTE 3)	2	EA
56	50-00682	WASHER NORDLOCK M10 - 16.6 X 2.5 1244 (SEE NOTE 3)	4	EA
57	OQ7060190	SCREW MC6S M10x60 12.9 (SEE NOTE 3)	4	EA
58	50-00082	NUT M6 - 1.00 Z_8 (SEE NOTE 2)	1	EA

ITEM	PART#	NAME	QTY	UOM
59	OQE07560	CABLE 8-POS FEMALE M12/PL 3M	1	EA
60	50-00773	WASHER NORDLOCK M8 - 13.5 X 2.5 1231 (SEE NOTE 2)	2	EA
61	50-01095	SH CS M5 - 0.8 X 40 Z_12.9	2	EA
62	OQ7072033	WASHER NORDLOCK M5 - 9.0 X 1.8	2	EA
63	50-01372	SH CS M8 - 1.25 X 25 Z_8.8 LOW PROFILE (SEE NOTE 2)	2	EA
64	50-00773	WASHER NORDLOCK M8 - 13.5 X 2.5 1231 (SEE NOTE 2)	2	EA
65	OQE06788	OQSS RETRO MOUNT PLATE OQ70/55 (SEE NOTE 2)	1	EA
66	OQE06572	OQSS RETRO SPACER PLATE OQ70/55-80 (SEE NOTE 2)	1	EA
67	OQ1800514	LOCK SENSOR E-VA	1	EA

2.0 - INSTALL COMPONENTS

2.1 - HOSE CLAMPS

2.1.1 - OQ4119447 - HOSE CLAMP 1"

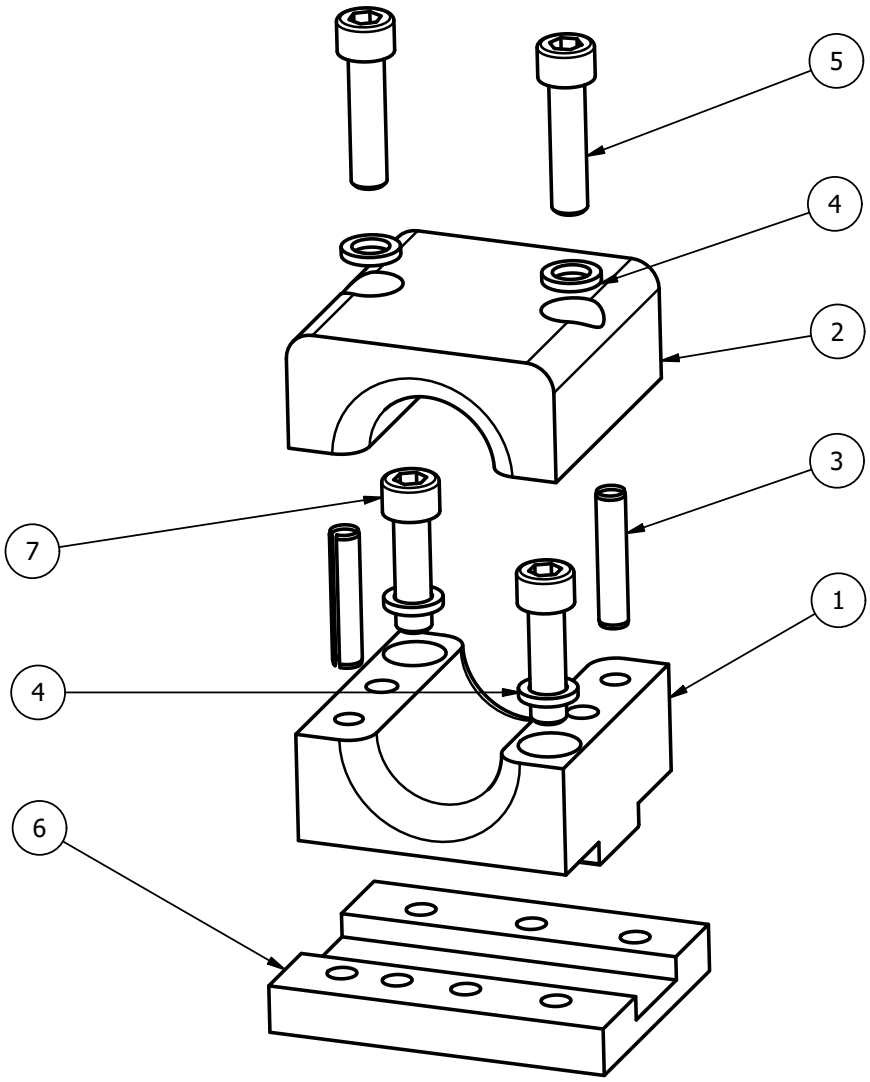

ITEM	PN#	NAME	QTY	UOM
1	OQ4119449	BASE HOSE HOLDER	1	EA
2	OQ4119448	UPPER HOSE HOLDER	1	EA
3	OQ7189026	SPRING PIPE STICK FRP 8X40 DIN 1481	2	EA
4	OQ7072028	LOCK WASHER NORLOCK M10	4	EA
5	OQ7060110	SCREW MC6S 10X40	2	EA
6	OQ4119391	WELDING PLATE	1	EA
7	OQ7060099	SCREW MC6S 10X35	2	EA

2.0 - INSTALL COMPONENTS

2.1 - HOSE CLAMPS

2.1.2 - OQ4119426 - HOSE CLAMP 1" + 1/2""

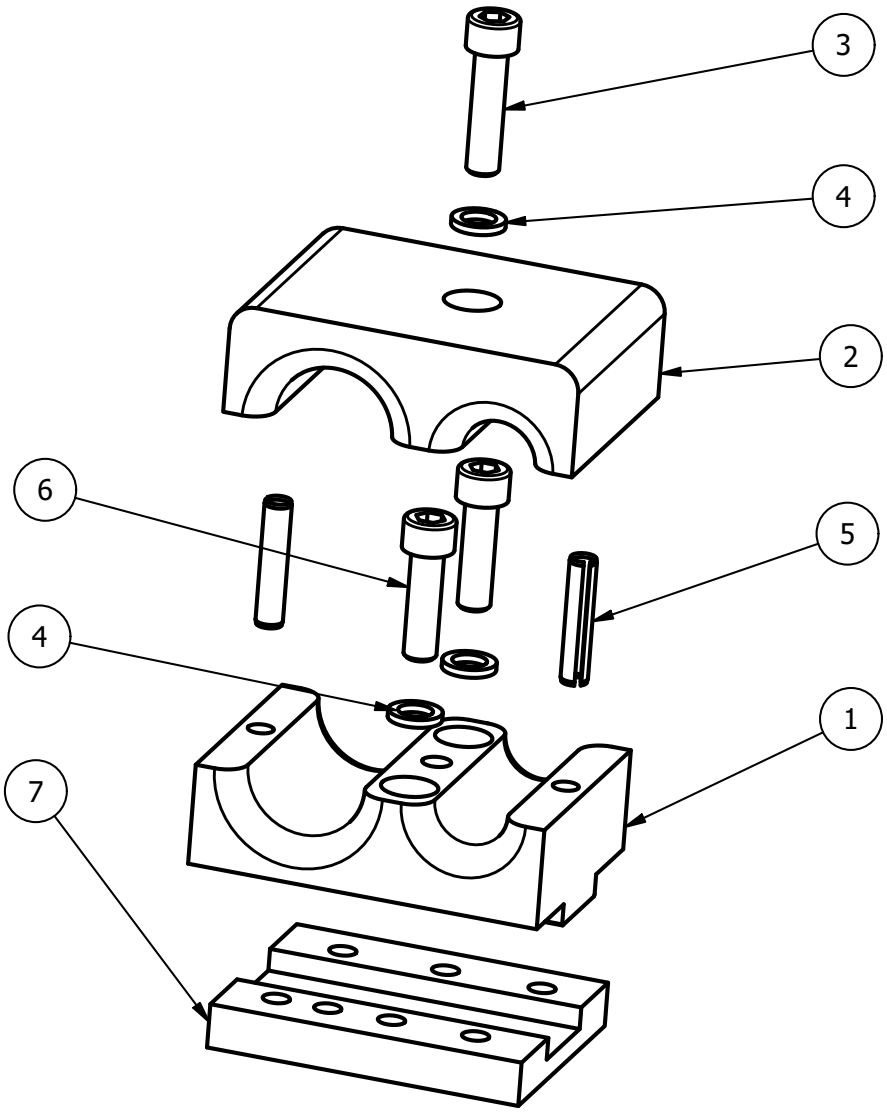

ITEM	PN#	NAME	QTY	UOM
1	OQ4119428	BASE HOSE HOLDER - 1” + 1/2”	1	EA
2	OQ4119427	UPPER HOSE HOLDER - 1” + 1/2”	1	EA
3	OQ7060110	SCREW MC6S 10X40	1	EA
4	OQ7072028	LOCK WASHER NORLOCK M10	3	EA
5	OQ7089026	SPRING PIPE STICK	2	EA
6	OQ7060099	SCREW MC6S 10X35	2	EA
7	OQ4119391	WELDING PLATE	1	EA

2.0 - INSTALL COMPONENTS

2.1 - HOSE CLAMPS

2.1.3 - OQ4129702 - HOSE CLAMP 1" + 3/4"

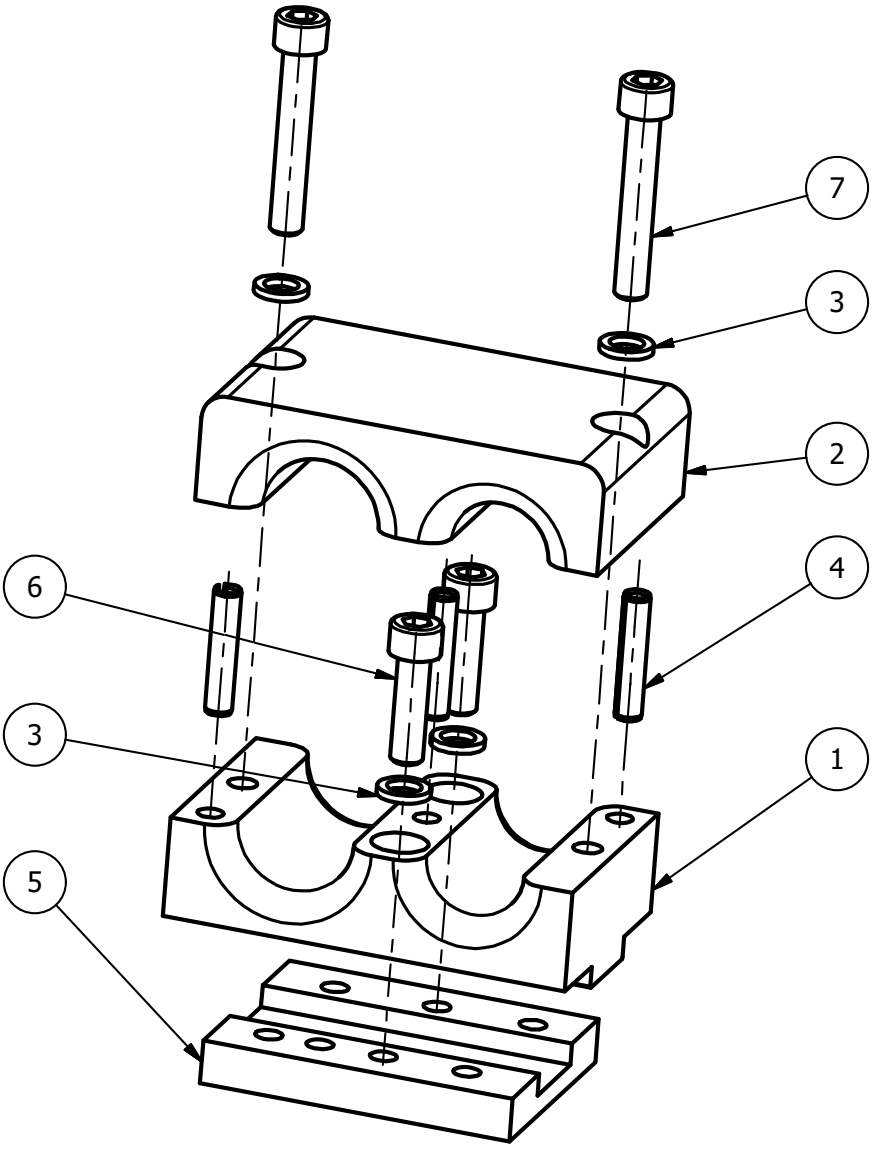

ITEM	PN#	NAME	QTY	UOM
1	OQ4129701	BASE HOSE HOLDER - 1" + 3/4"	1	EA
2	OQ4129700	UPPER HOSE HOLDER - 1" + 3/4"	1	EA
3	OQ7072028	LOCK WASHER NORLOCK M10	4	EA
4	OQ7089026	SPRING PIPE STICK	3	EA
5	OQ4119391	WELDING PLATE	1	EA
6	OQ7060099	SCREW MC6S 10X35	2	EA
7	OQ7060190	SCREW MC6S 10X60(12.9)	2	EA

2.0 - INSTALL COMPONENTS

2.1 - HOSE CLAMPS

2.1.4 - OQ4119435 - HOSE CLAMP 1" + 3/4" + 1/2"

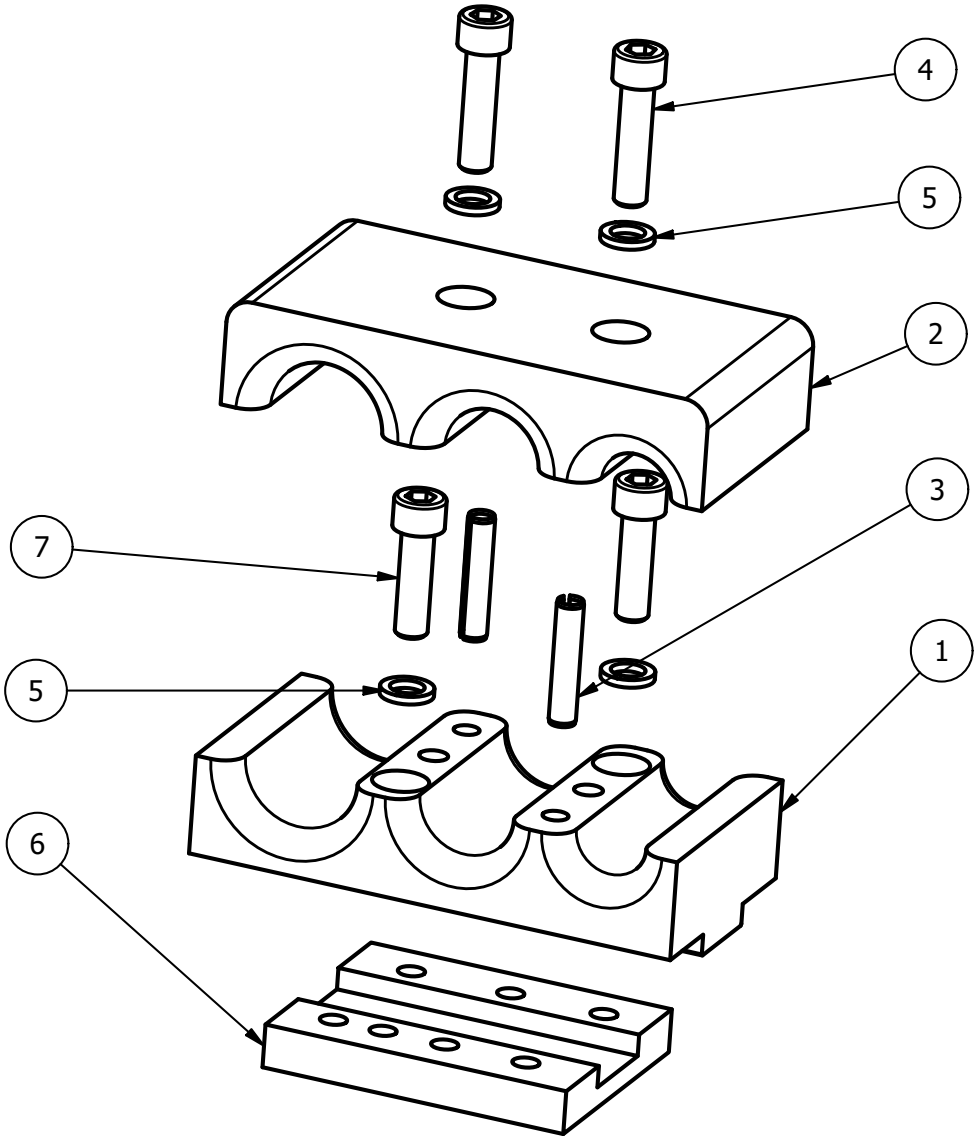

ITEM	PN#	NAME	QTY	UOM
1	OQ4119437	BASE HOSE HOLDER 1"+3/4"+1/2"	1	EA
2	OQ4119436	UPPER HOSE HOLDER 1"+3/4"+1/2"	1	EA
3	OQ7089026	SPRING PIPE STICK FRP 8x40 DIN 1481	2	EA
4	OQ7060110	SCREW MC6S 10x40	2	EA
5	OQ7072028	LOCK WASHER NORDLOCK M10	4	EA
6	OQ4119391	WELDING PLATE	1	EA
7	OQ7060099	SCREW MC6S M10x35 8.8 FZB	2	EA

2.0 - INSTALL COMPONENTS

2.1 - HOSE CLAMPS

2.1.5 - OQ4124038 - HOSE CLAMP 1" + 2" X 1/2"

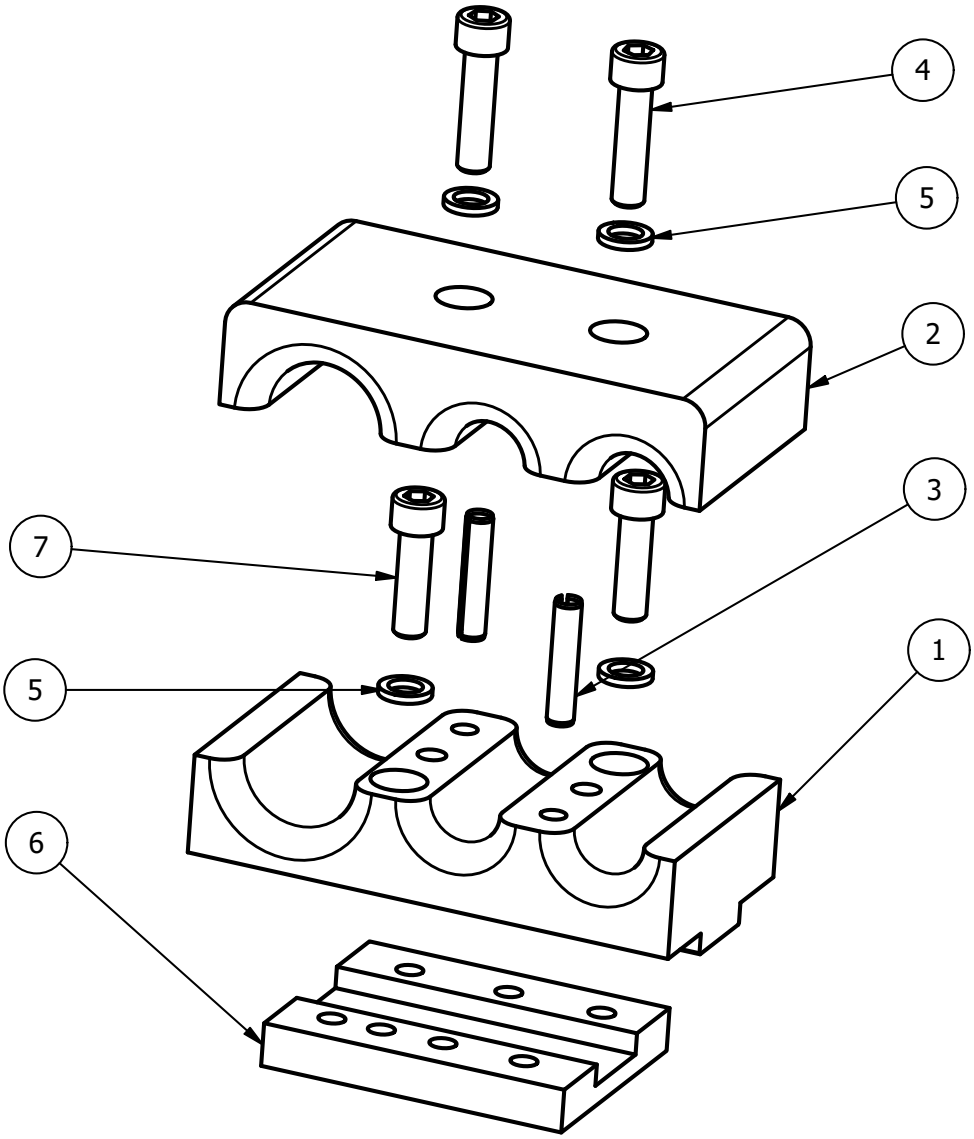

ITEM	PN#	NAME	QTY	UOM
1	OQ4124040	BASE HOSE HOLDER 1" 2 X 1/2"	1	EA
2	OQ4124039	UPPER HOSE HOLDER 1" 2 X 1/2"	1	EA
3	OQ7089026	SPRING PIPE STICK FRP 8X40 DIN 1481	2	EA
4	OQ7060110	SCREW MC6S 10X40	2	EA
5	OQ7072028	LOCK WASHER NORLOCK M10	4	EA
6	OQ4119391	WELDING PLATE	1	EA
7	OQ7060099	SCREW MC6S 10X35	2	EA

2.0 - INSTALL COMPONENTS

2.1 - HOSE CLAMPS

2.1.6 - OQ4119458 - HOSE CLAMP SPACER KIT

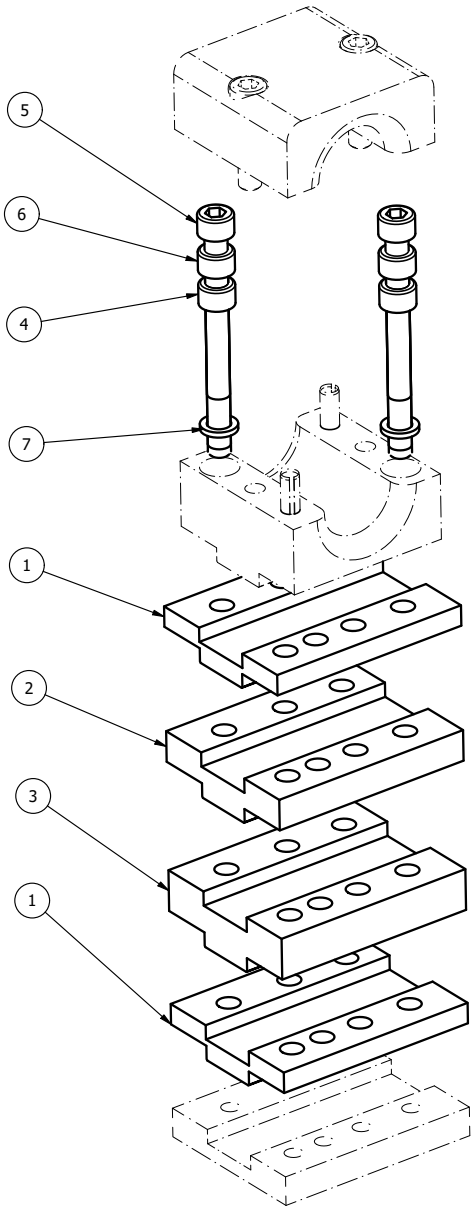

ITEM	PN#	NAME	QTY	UOM
1	OQ4119392	SPACER 10MM, HOSE CLAMP	2	EA
2	OQ4119393	SPACER 15MM, HOSE CLAMP	1	EA
3	OQ4119459	SPACER 20MM, HOSE CLAMP	1	EA
4	OQ7060146	SCREW MC6S M10x70 12,9	2	EA
5	OQ7060205	SCREW MC6S M10x80 12.9	2	EA
6	OQ7060177	SHCS MC6S M10-1.50 x90 12.9	2	EA
7	50-00682	WASHER NORDLOCK M10 - 16.6 X 2.5 1244	2	EA

2.0 - INSTALL COMPONENTS

2.2 - OQ5110941 - GUIDE BLOCK MANIFOLD (DRAIN CROSSOVER)

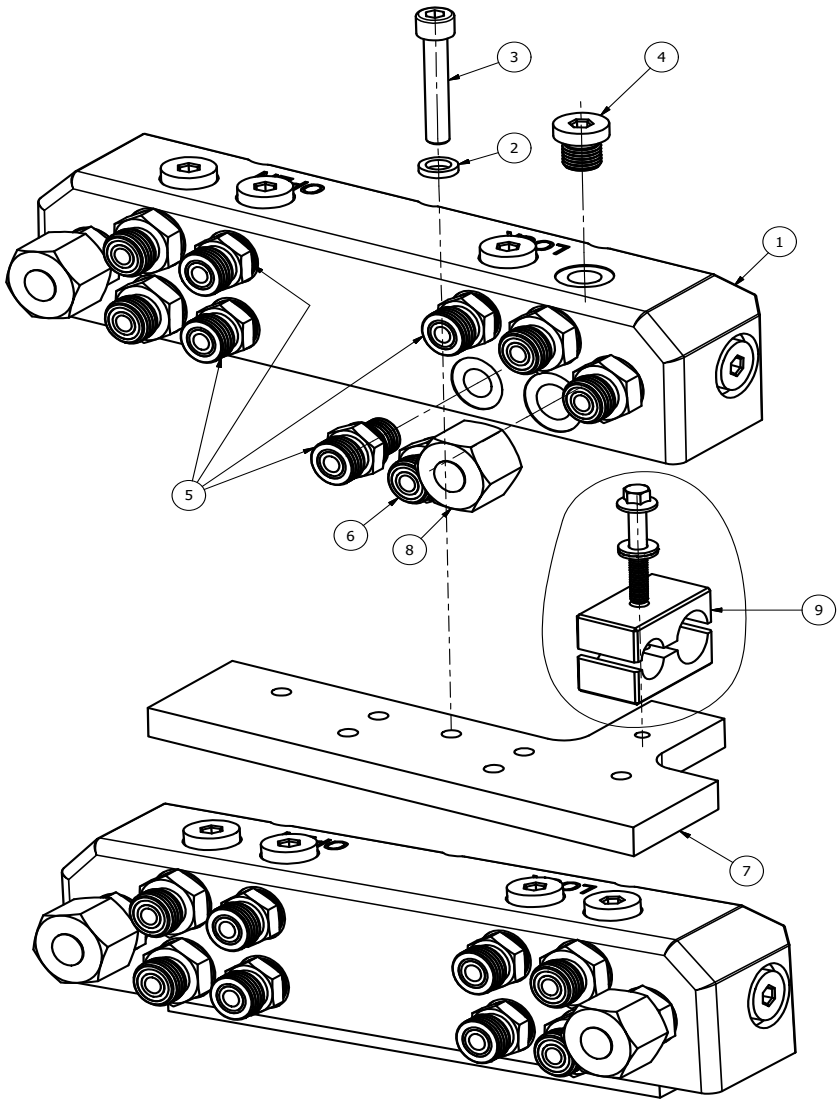

ITEM	PN#	NAME	QTY	UOM
1	OQ4121328	HYDR.BLOCK, LOCK-, 1/2"- & DRAIN	1	EA
2	OQ7072021	WASHER NORDLOCK M8	3	EA
3	OQ7060102	SCREW MC6S M8 - 1.25 x 45	3	EA
4	OQ7200283	PLUG G1/4" ED	6	EA
5	OQ7200213	NIPPLE ORFS06 UF-M14x1,5 UF	4	EA
6	OQ7200249	NIPPLE ORFS08 UF-M16x1,5 UF	6	EA
7	OQ4115481	BRACKET, LOCKING CIRCUIT	1	EA
8	OQ7200002	BLIND NUT ORFS08IF	2	EA
9	OQ5180116	BRACES - COMPLETE	1	EA

2.0 - INSTALL COMPONENTS

2.3 - OQE06347 - ASSEMBLY GUIDE BLOCK OQ65+

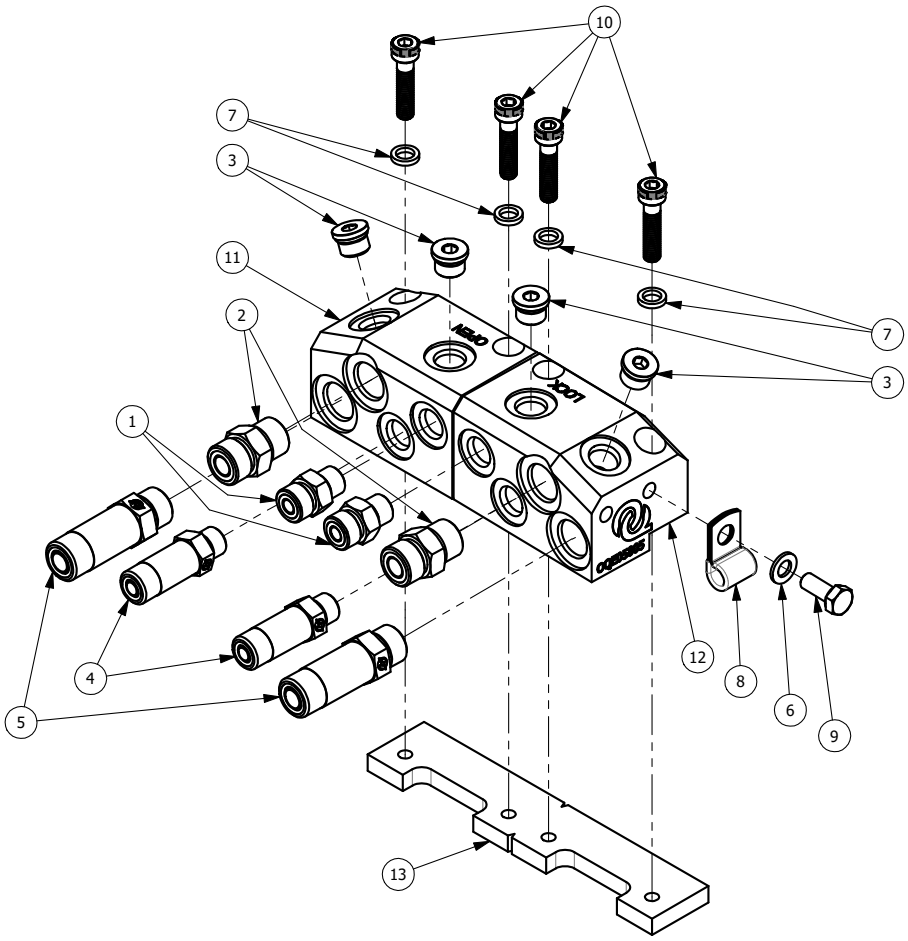

ITEM	PN#	NAME	QTY	UOM
1	40-00088	FTG-HYD 06MB-06MO	2	EA
2	40-00314	FTG-HYD 08MB-08MO	2	EA
3	40-02866	FTG-HYD 06MB PLUG HOLLOW HEX	4	EA
4	40-03032	FTG-HYD 06MB-06MO-L	2	IN
5	40-03033	FTG-HYD 08MB-08MO-L	2	EA
6	50-00493	WASHER M8 - 16.0 X 1.6 Z	1	EA
7	50-00773	WASHER NORDLOCK M8 - 13.5 X 2.5 1231	4	EA
8	50-00872	P-CLIP M10 3/8" DIA X 3/4" W	1	EA
9	50-00931	HH CS M8-1.00 X 20 Z_8.8	1	EA
10	OQ7060078	SCREW MC6S M8 - 1.25 x 35 Z_12.9	4	EA
11	OQE05804	GUIDE BLOCK OQ65+ SPLIT-CAB	1	EA
12	OQE05805	GUIDE BLOCK OQ65+ SPLIT-TANK	1	EA
13	OQE05806	GUIDE BLOCK PLATE OQ65+	1	EA

3.0 - SERVICE COMPONENTS

3.1 - OQ5116281 - FIRST AID KIT OQ70/55

ITEM	PN#	NAME	QTY	UOM
1	OQ7020130	NOSE SEAL 1/2”	4	EA
2	OQ7020131	NOSE SEAL 3/4”	4	EA
3	OQ7020132	NOSE SEAL 1”	4	EA
4	OQ4112220	PUSHER 1/2”	1	EA
5	OQ4112221	PUSHER 3/4”	1	EA
6	OQ4112222	PUSHER 1”	1	EA
7	OQ4116298	MOUNTING TOOL 1/2”	1	EA
8	OQ4116296	MOUNTING TOOL 3/4”	1	EA
9	OQ4116295	MOUNTING TOOL 1”	1	EA
10	OQ7410094	DECAL FIRST AID KIT	1	EA
11	OQ7406065	FIRST AID KIT BOX	1	EA

Notes

Notes

Notes

Dealer:

OILQUICK®
Automatic quick coupler systems

OilQuickAmericas
155 Main Street
Superior, WI 54880
Phone: 262.607.8425
Fax: 715.395.3703

E-mail: info@oilquickamericas.com
Web: www.oilquickamericas.com

Part Number: OQE06548 09/08/2026